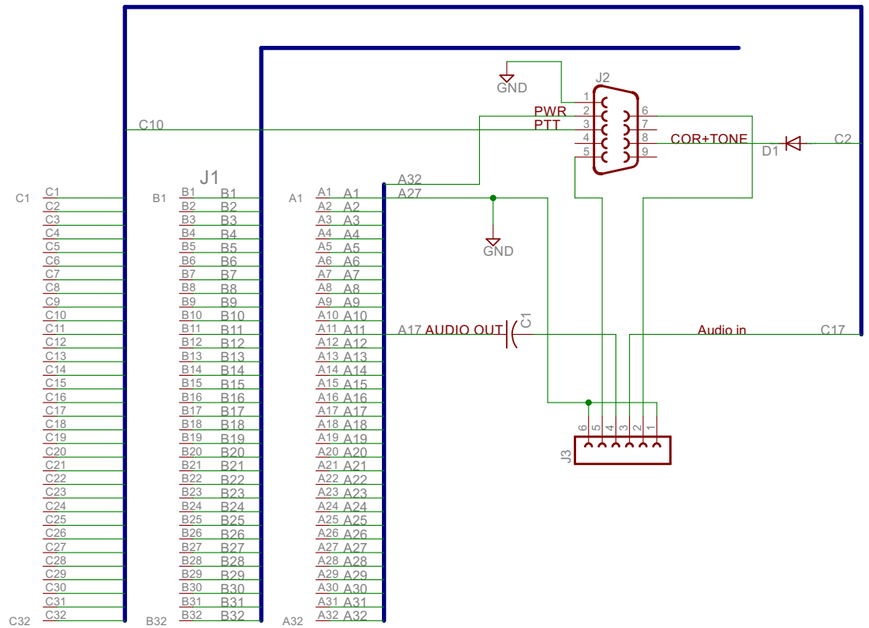

TITLE: MTR Controller adaptor rev 02 - Linker IIa

Document Number:

REV:

Date: 3/11/2018 11:29:12 AM

Sheet: 1/1